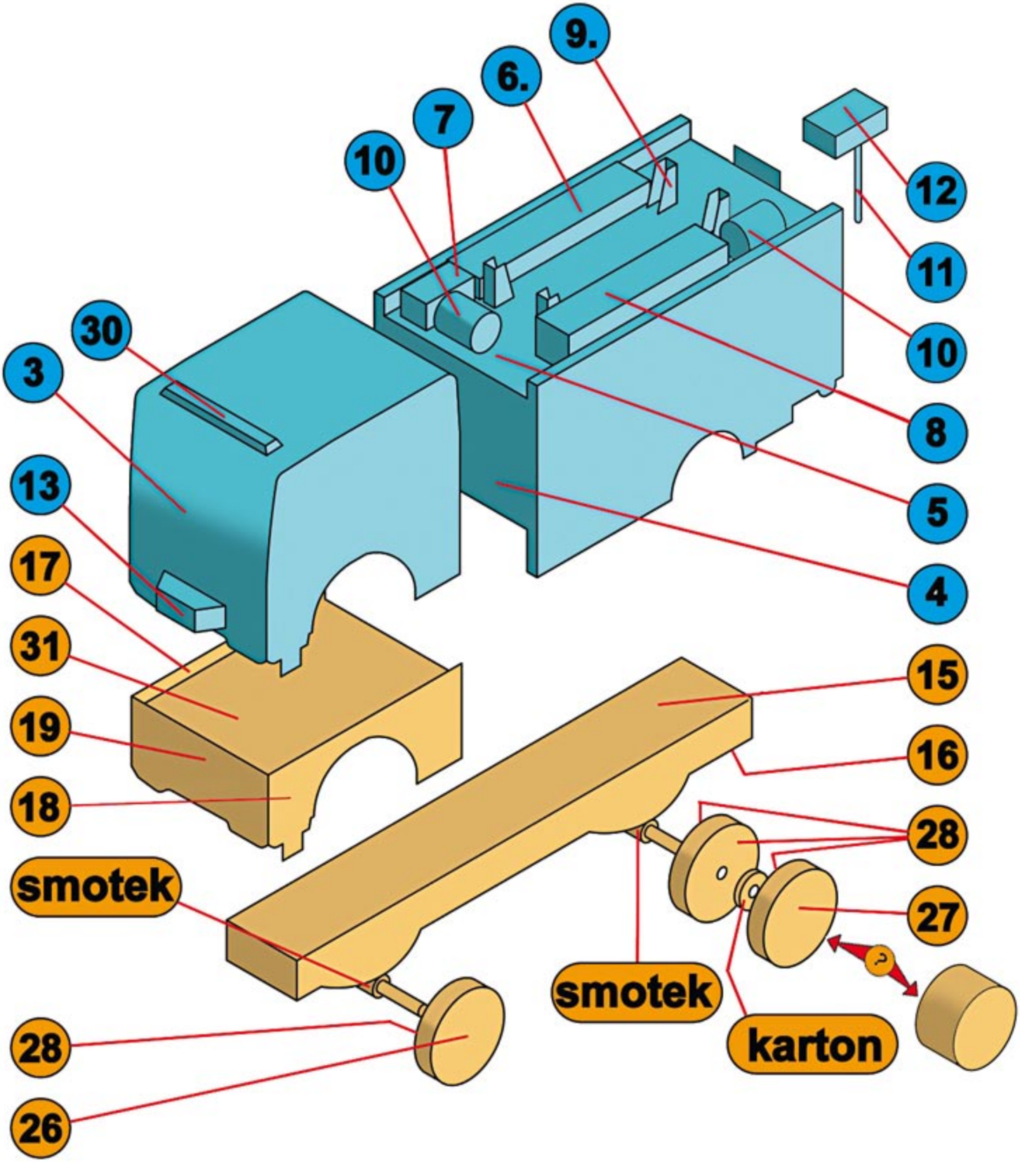
9.
6.
7
10
12
11
10
8
5
4
30
3
13
17
31
19
18
15
16
28
27
smotek
smotek
karton
28
26